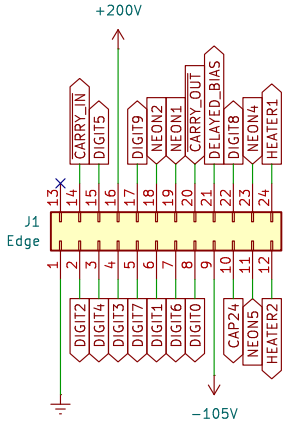

Set/Reset signals on the flip−flops for the incoming digit to add to the accumulator

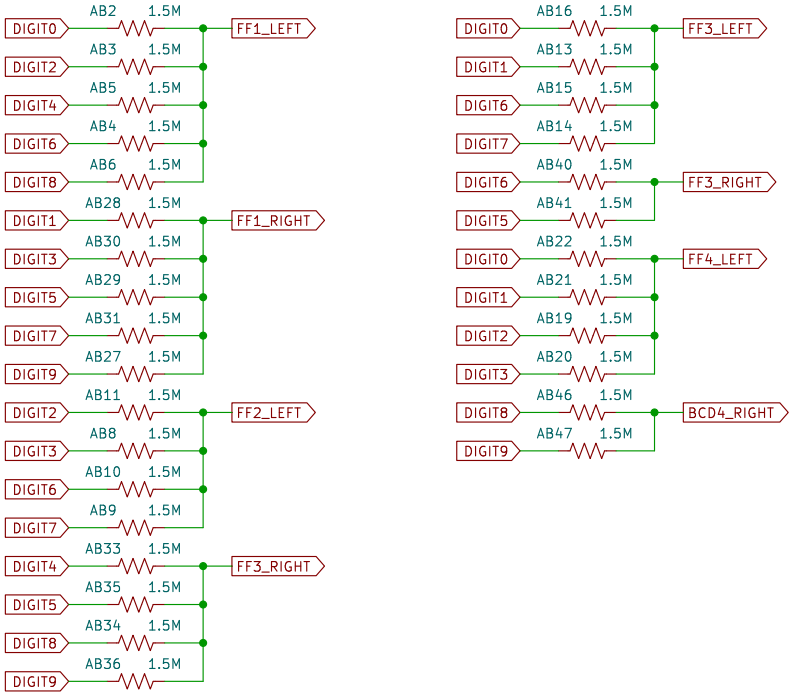

Flip−Flop 1

File: flip_flop_1.kicad_sch

Flip−Flop 2

File: flip_flop_2.kicad_sch

Flip−Flop 3

File: flip_flop_3.kicad_sch

Flip−Flop 4

File: flip_flop_4.kicad_sch

1. All resistors 1/2 watt +/− 5% unless otherwise stated.
2. All capacitors in MMFD (pF), 500 V.D.C.
3. Tube unit location: G2,H2,J2,L2,M2,N2,R2,S2,T2,U2,X2,Y2,Z2.
4. Bank 0 swaps DELAYED_BIAS and −105V in flip−flops 1 and 3.

For wiring diagram see 441E1302

Sheet: /
File: Accumulator_Unit_441C1201.kicad_sch

Title: Compu−Tronic Accumulator Unit Schematic

Size: A4	Date: 10−23−1958	Rev:
KiCad E.D.A. 8.0.9		Id: 1/5

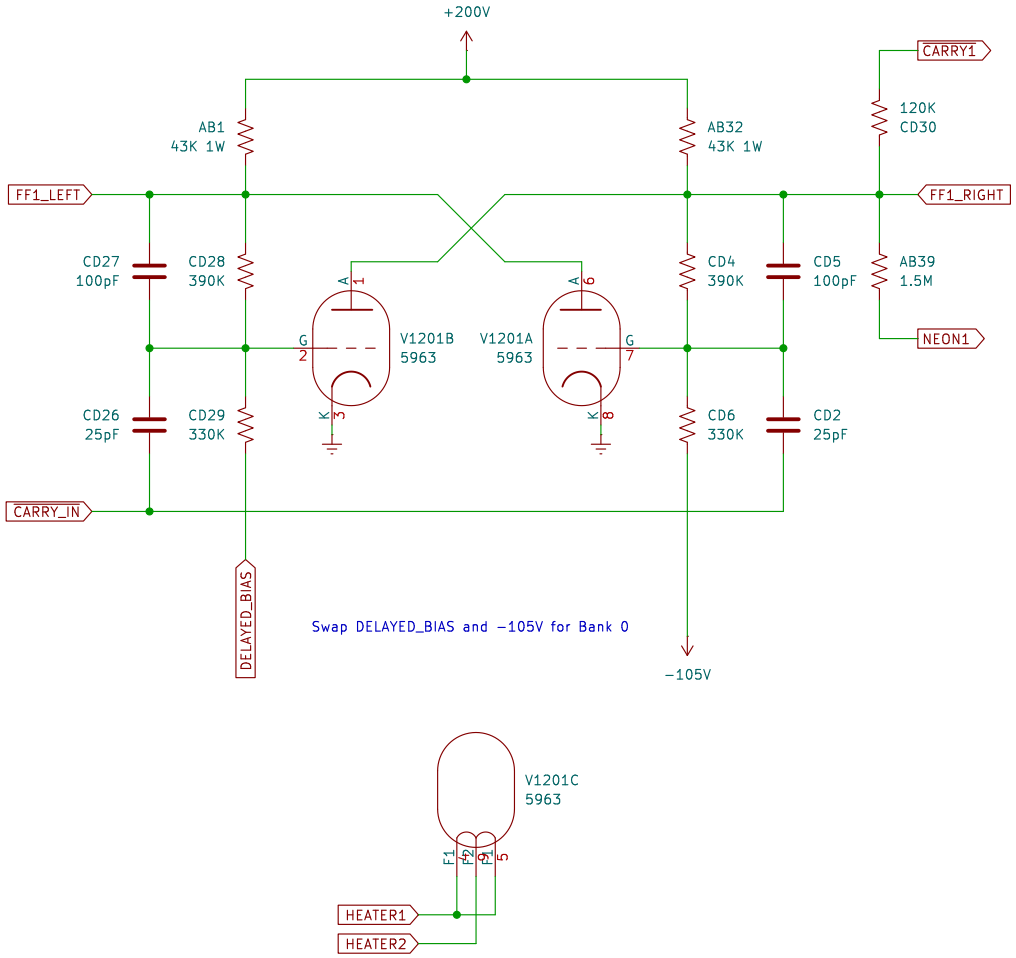

Sheet: /Flip-Flop 1/
File: flip_flop_1.kicad_sch

Title: Compu-Tronic Accumulator Unit Schematic

Size: A4	Date: 10-23-1958	Rev:
KiCad E.D.A. 8.0.9		Id: 2/5

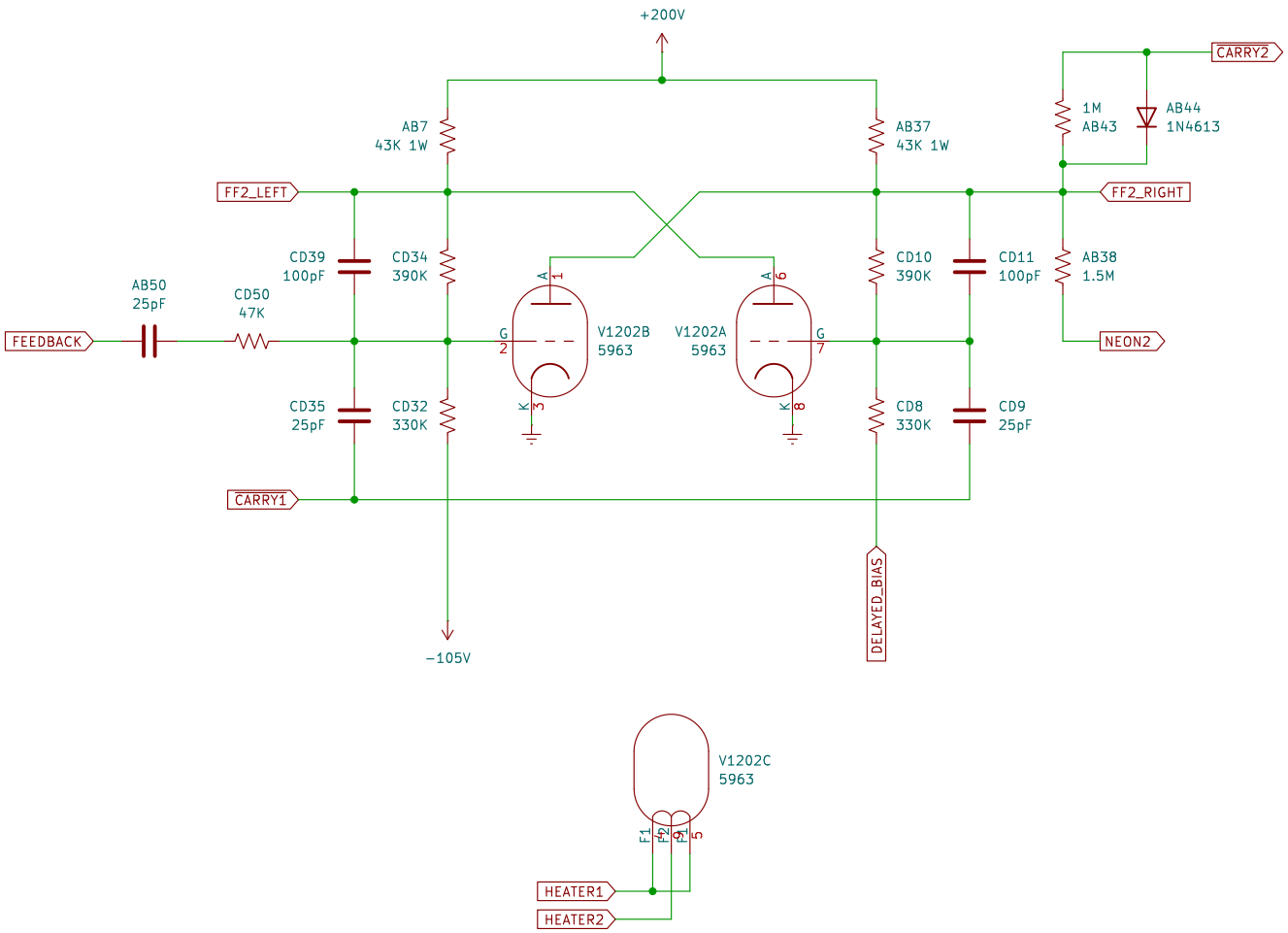

Sheet: /Flip-Flop 2/
File: flip_flop_2.kicad_sch

Title: Compu-Tronic Accumulator Unit Schematic

Size: A4	Date: 10-23-1958	Rev:
KiCad E.D.A. 8.0.9		Id: 3/5

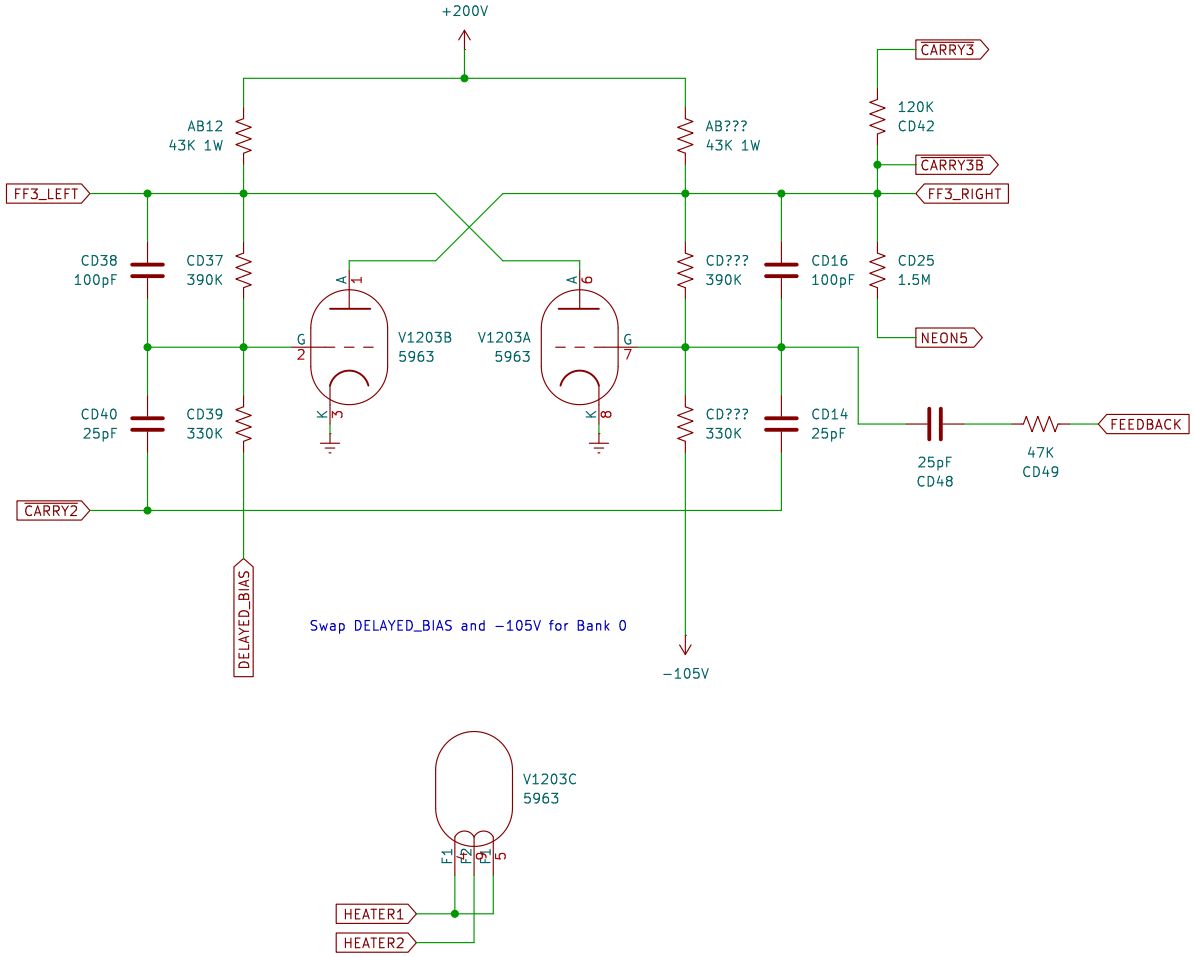

Sheet: /Flip−Flop 3/
File: flip_flop_3.kicad_sch

Title: Compu−Tronic Accumulator Unit Schematic

Size: A4	Date: 10−23−1958	Rev:
KiCad E.D.A. 8.0.9		Id: 4/5

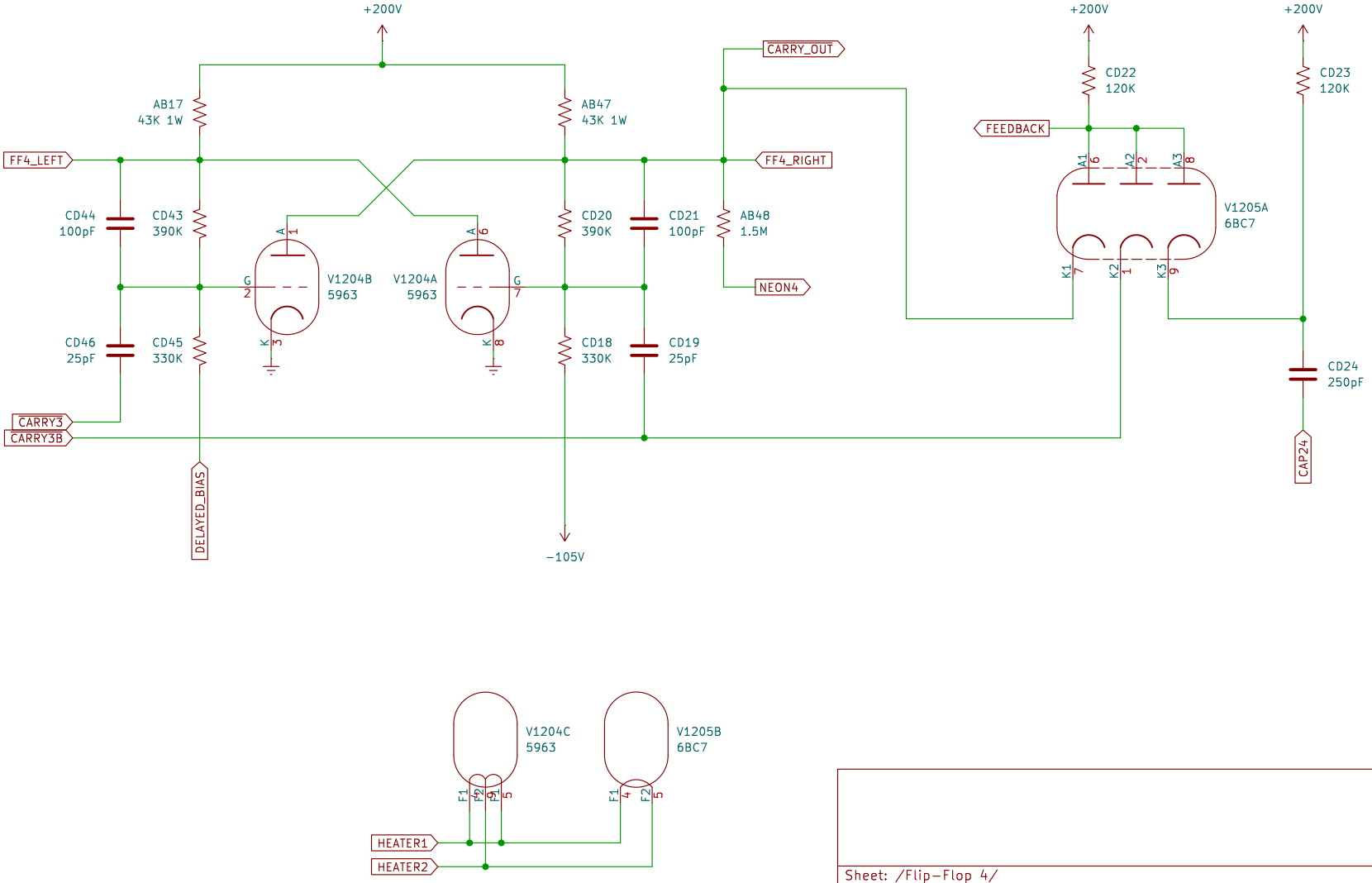

Sheet: /Flip-Flop 4/
File: flip_flop_4.kicad_sch

Title: Compu-Tronic Accumulator Unit Schematic

Size: A4	Date: 10-23-1958	Rev:
KiCad E.D.A. 8.0.9		Id: 5/5